ACCESSORY KIT INSTALLATION MANUAL

IGNITION CONTROL P/N (S1-33102977000)

FOR USE WITH MODELS: ALL TWO-STAGE VARIABLE SPEED MODELS

GENERAL INFORMATION

This control combines the functions of the ignition control board and the CFM selector boards used on previous furnace models. So in cases where this control is being used to replace a failed ignition board or a failed CFM board, both boards will be replaced by this one new board.

This board is a replacement for part numbers 031-01909-000 (ignition), 031-09118-000 (CFM), 031-09117-000 (ignition), 031-01955-000 (CFM), 031-01911-000 (CFM), 265904 (combined) and 542766.

Figure 1 shows the basic board layout and Figure 2 shows the general component and safety circuit connections (Refer to the electrical wire diagram for the furnace being serviced for circuit connections specific to that model).

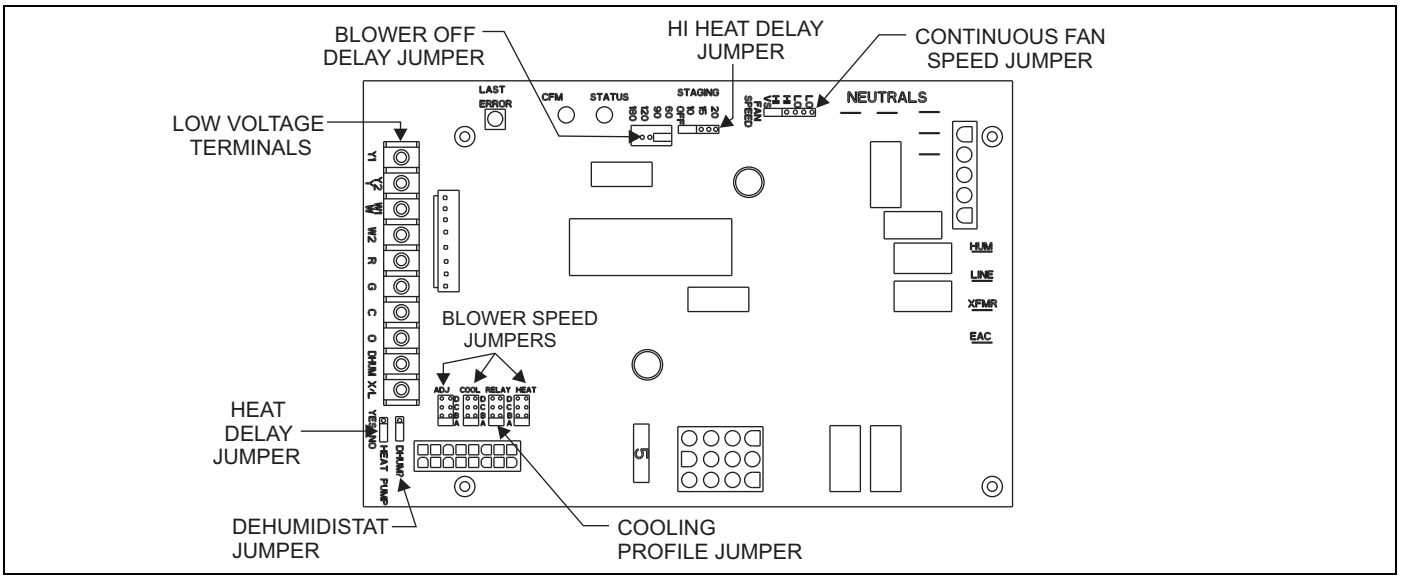

FIGURE 1: Furnace Control Board

INSTALLATION

The required number of steps to remove the failed ignition control and install the new ignition control will vary depending on the furnace model. However the wire connections will remain the same.

Some models will need new mounting holes to be drilled in the existing panel. Use the drill template on the last page of these instructions as a guide.

⚠ WARNING

Disconnect electrical power to the furnace before installing this control. Failure to cut power could result in an electrical shock or equipment damage.

⚠ CAUTION

Label all wires prior to disconnection when servicing controls. Wiring errors can cause improper and dangerous furnace operation. Verify proper operation after servicing.

NOTICE

All wiring must be in accordance with both the National Electric Code, latest edition, and all local electrical codes.

REMOVAL OF FAILED IGNITION CONTROL

1. Turn off electrical power.
2. Remove furnace vest and blower access panels.
3. Remove electrical box cover, if required.
4. Label all wires prior to disconnection.
5. Disconnect all wires to control(s) to be replaced.
6. Remove and discard motor control wire harness (16 pin plug to motor).
7. Remove screws or pegs fastening controls to electrical panel.
8. Fasten hole template, included with this installation instruction, to electrical panel and drill new mounting holes. (If required).

PARTS LIST

1. Ignition control P/N S1-036102977000
2. Installation Instruction Sheet
3. Motor wiring harness

INSTALLATION OF IGNITION CONTROL

1. Orient the control as close as possible to the orientation of the board being replaced.
2. Align the plastic mounting feet with the mounting holes in the electric panel and press on each corner of the control board to seat the mounting feet.

⚠ CAUTION

Apply only enough pressure to seat the mounting foot or the ignition control may be damaged.

3. Figure 2 shows a typical system wiring diagram, which may vary slightly depending on the furnace model. Use the wiring diagram label on the furnace as your primary guide.
4. Connect the new wiring harness supplied with this kit to the motor and the control board.
5. Check to see that all wire connections were made properly before applying power.
6. Apply power and test furnace operation.

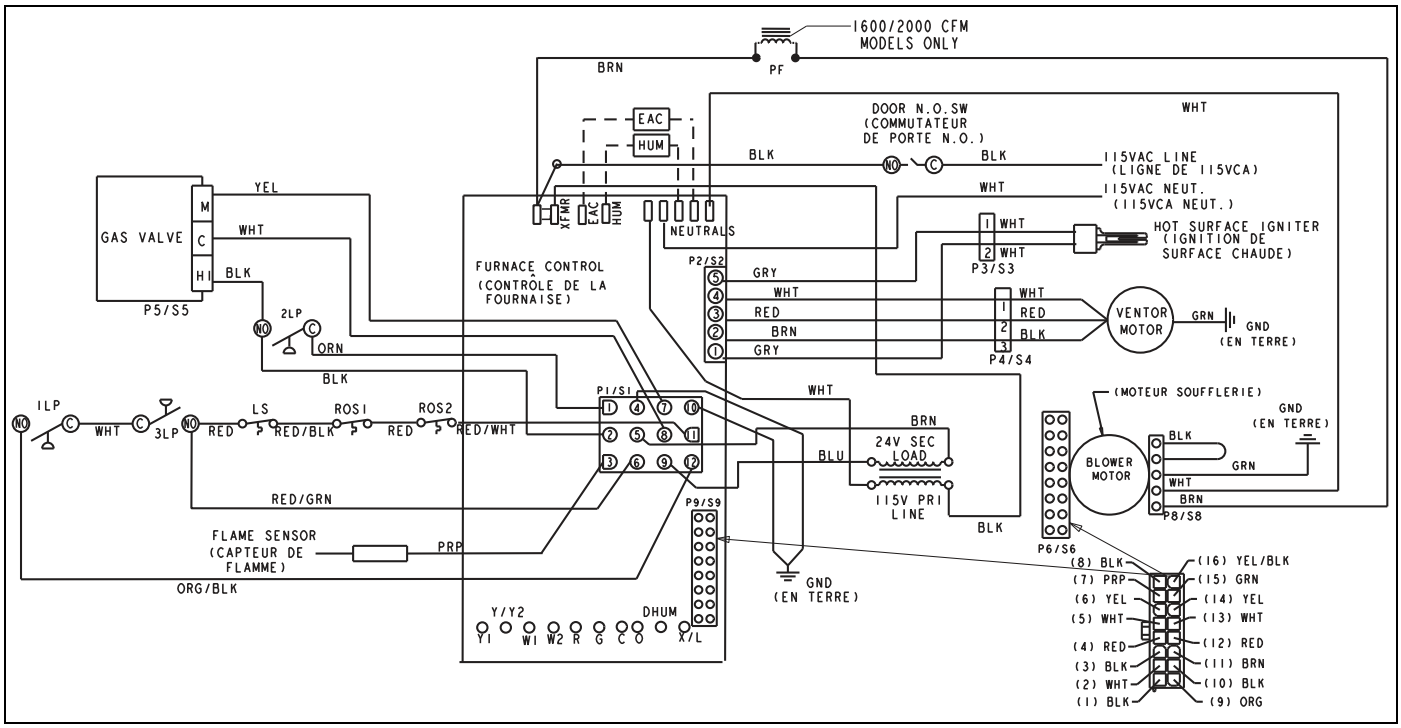

FIGURE 2: Board Layout - Typical System Wiring

FURNACE CONTROL DIAGNOSTICS

The furnace has built-in, self-diagnostic capability. A blinking LED light on the control board can flash red, green or amber to indicate various conditions. The control continuously monitors its own operation and the operation of the system. If a failure occurs, the LED light will indicate the failure code.

The SLOW flash speed is two seconds on and two seconds off.

The other flash codes listed below have the following timing: LED light will turn on for 1/3 second and off for 1/3 second. This pattern will be repeated the number of times equal to the code. There will be a two-second pause between codes. For example, the six red flash code will flash the LED light on and off six times, then will be off for two seconds. This pattern will repeat as long as the fault condition remains. The continuous flash codes listed below will flash the LED light on and off continuously, with no breaks or longer pauses.

SLOW GREEN FLASH: Normal operation, no thermostat calls.

SLOW AMBER FLASH: Normal operation with call for heat.

LED STEADY OFF – If the LED light does not flash at all, check for power to the board and check for a blown fuse on the board. If the board is properly powered and the fuse is not blown, the control board may need to be replaced.

STEADY ON ANY COLOR: Control failure. Turn power to the furnace off and back on. If the fault code returns, the control board must be replaced. The control board is not field-repairable.

CONTINUOUS AMBER FLASH: Flame sense current is below 1.5 microamps. Check and clean flame sensor. Check for proper gas flow. Verify that current is greater than 1.5 microamps at flame current test pad.

1 RED FLASH: This indicates that flame was sensed when there was not a call for heat. The control will turn on both the inducer motor and supply air blower. Check for a leaking or slow-closing gas valve.

2 RED FLASHES: This indicates that the pressure switch is closed when it should be open. The control confirms that the pressure switch contacts are open at the beginning of each heat cycle and will not let the ignition sequence continue if the pressure switch contacts are closed when they should be open. Check for a faulty pressure switch or miswiring.

3 RED FLASHES: This indicates the pressure switch contacts are open when they should be closed. Check for faulty inducer, blocked vent pipe, broken pressure switch hose, disconnected pressure switch or inducer wires or faulty pressure switch.

4 RED FLASHES: This indicates that the main limit switch has opened its normally closed contacts. The control will turn on the supply air blower and inducer. Check for a dirty filter, improperly sized duct system, incorrect blower speed setting, incorrect firing rate, loose limit switch wiring or faulty blower motor.

If the limit switch has not closed within five minutes, the control will assume that the blower is not functioning, will start a hard lockout and will begin to flash the 11 Red Flashes error code. If, after fifteen minutes, the main limit still has not closed, the control will assume that a manual-reset rollout switch has opened and will begin to flash the 5 Red Flash error code. See the description of " 5 Red Flashes" and " 11Red Flashes" below.

If the main limit switch opens five times within a single call for heat, the control will indicate 4 Red Flashes and will enter a one-hour soft lockout.

5 RED FLASHES: This fault is indicated if the limit circuit is open for more than fifteen minutes, usually indicating that a manual-reset rollout switch has opened. Check for proper combustion air, proper inducer operation, and primary heat exchanger failure or burner problem. The control will enter a hard lockout and power will have to be cycled off and on to reset the control after the problem has been corrected.

6 RED FLASHES: This indicates that while the unit was operating, the pressure switch opened four times during the call for heat. Check for faulty inducer, blocked vent pipe or faulty pressure switch. The furnace will lock out for one hour and then restart.

7 RED FLASHES: This fault code indicates that the flame could not be established during three trials for ignition. Check that the gas valve switch is in the ON position. Check for low or no gas pressure, faulty gas valve, dirty or faulty flame sensor, faulty hot surface ignitor, loose wires or a burner problem. The furnace will lock out for one hour and then restart.

8 RED FLASHES: This fault is indicated if the flame is lost five times (four recycles) during the heating cycle. Check for low gas pressure, dirty or faulty flame sensor or faulty gas valve. The furnace will lock out for one hour and then restart.

9 RED FLASHES: Indicates reversed line voltage polarity, grounding problem or reversed low voltage transformer wires. Both heating and cooling operations will be affected. Check polarity at furnace and branch. Check furnace grounding. Check that flame probe is not shorted to chassis. The furnace will not start the ignition sequence until this problem is corrected.

10 RED FLASHES: Gas valve energized with no call for heat. The main blower and inducer blower will run and no ignition sequence will be started as long as this condition exists. Check gas valve and gas valve wiring.

11 RED FLASHES: This indicates that the limit circuit has remained open for more than five minutes and less than fifteen minutes. This condition is usually caused by a failed blower motor or blower wheel. The control will enter a hard lockout and power will have to be cycled off and on to reset the control after the problem has been corrected.

13 RED FLASHES: This indicates that the high-fire pressure switch is open when it should be closed. Check for a partially blocked vent pipe or a loose or disconnected wire before replacing pressure switch.

4 AMBER FLASHES: The control is receiving a " Y" signal from the thermostat without a " G"signal. The furnace will operate normally in both heating and cooling, but this fault code will be displayed in order to alert the user that there is a wiring problem. Verify that the " G" wire from the thermostat is connected properly.

SOFT LOCKOUT: This control includes a soft lockout that will reset automatically after one hour. This provides protection to an unoccupied structure if a temporary condition exists causing a furnace malfunction. An example of this is a temporary interruption in gas supply that would prevent the furnace from lighting. The control will keep trying to light each hour and will resume normal operation if the gas supply is restored.

HARD LOCKOUT: Some fault conditions result in a hard lockout, which requires power to the control to be turned off and then back on to reset the control. The control will not automatically restart.

IGNITION CONTROL FLAME SENSE LEVELS
Normal flame sense current is approximately 3.7 microamps DC (µa)
Low flame signal warning starts at 1.5 microamps.
Low flame signal control lockout point is 0.1 microamps DC (µa)

DIAGNOSTIC FAULT CODE STORAGE AND RETRIEVAL

The control in this furnace is equipped with memory that will store up to five error codes to allow a service technician to diagnose problems more easily. This memory will be retained even if power to the furnace is lost. **This feature should only be used by a qualified service technician.**

If more than five error codes have occurred since the last reset, only the five most recent will be retained. The furnace control board has a button, labeled LAST ERROR that is used to retrieve error codes. This function will only work if there are no active thermostat signals. So any call for heating, cooling or continuous fan must be terminated before attempting to retrieve error codes.

To retrieve the error codes, push the LAST ERROR button. The LED on the control will then flash the error codes that are in memory, starting with the most recent. There will be a two-second pause between each flash code. After the error codes have all been displayed, the LED will resume the normal slow green flash after a five second pause. To repeat the series of error codes, push the button again.

If there are no error codes in memory, the LED will flash two green flashes. To clear the memory, push the LAST ERROR button and hold it for more than five seconds. The LED will flash three green flashes when the memory has been cleared and the button is released, then will resume the normal slow green flash after a five-second pause.

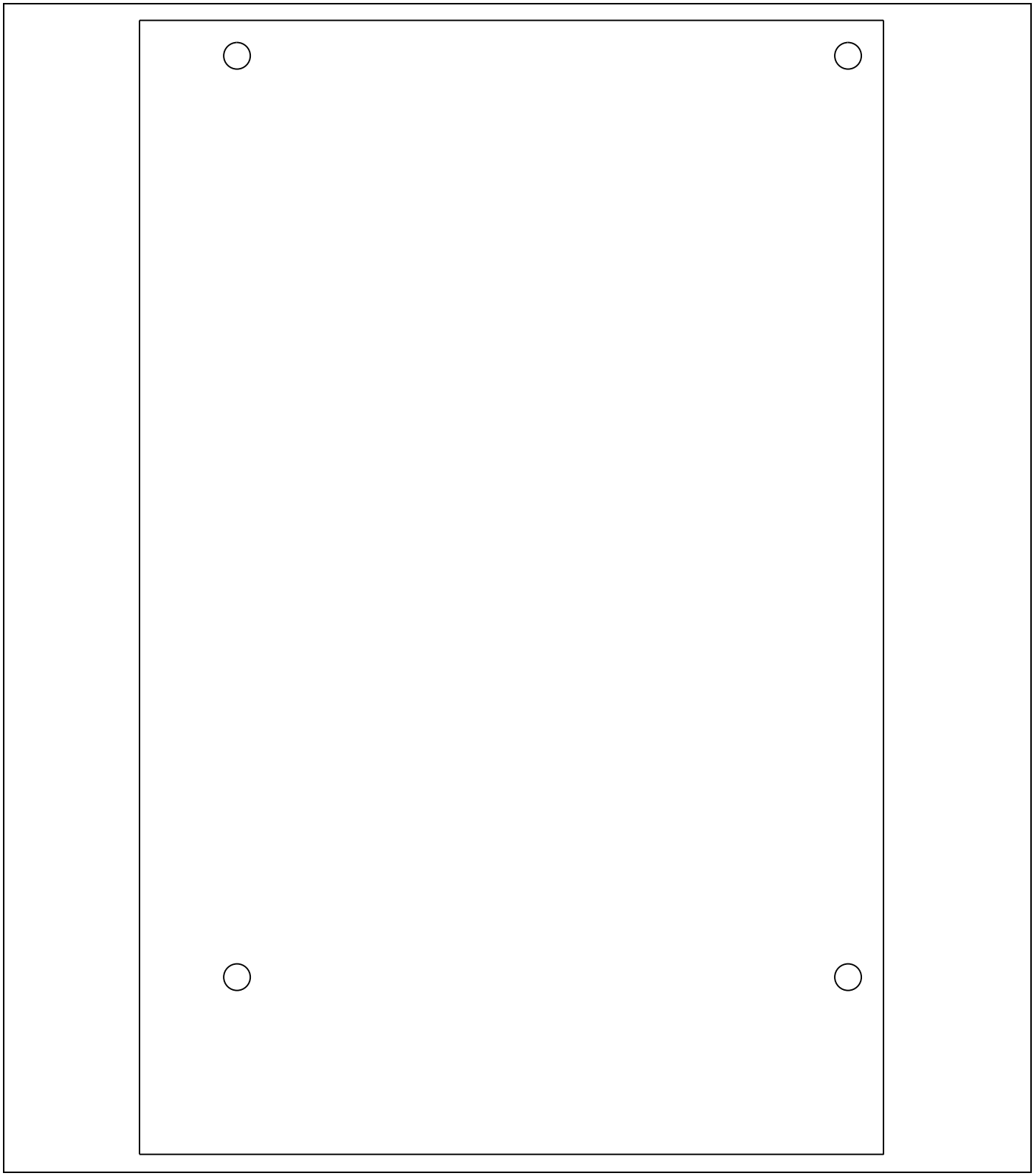

FIGURE 3: Hole Template

035-23069-001-B-0914
Supersedes: 035-23069-001-A-1010

York International Corp.
5005 York Drive
Norman, OK 73069